ATIKA1	QUANTITY	PROJECT NAME :	PANEL HEIGHT :	PANEL WEIGHT :	Vertex BD	PANELOVE STENY
	22	ZSRUZINOV_A13	1000	38.9kg	SCREW QTY: 42	

Sheets

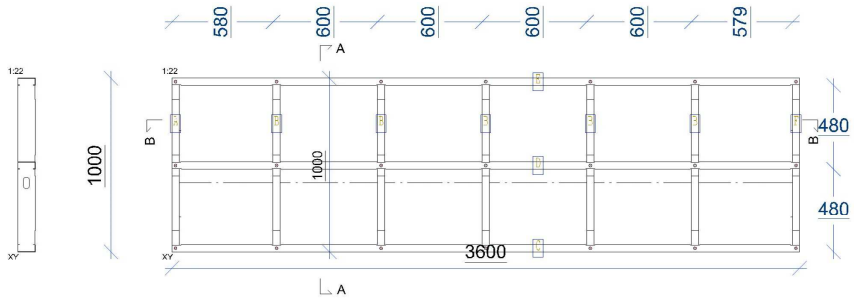

EXTERIOR SHEATHING

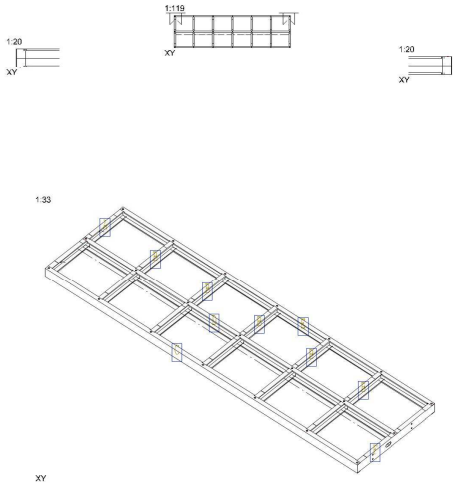

PIECE LIST				
LABEL	QTY	MATERIAL	DESCRIPTION	LENGTH
A	1	100S-41-1.5	STUD	997
B	5	100S-41-1.5	STUD	997
C	1	100S-41-1.5	BOTTOM TRACK	3600
D	1	100S-41-1.5	NOGGIN	3597
E	1	100S-41-1.5	TOP TRACK	3600
F	1	100S-41-1.5	STUD	997
Qty Total: 10	Total Length: 17776.00mm			

ATIKA1

ATIKA1	QUANTITY	PROJECT NAME :	PANEL HEIGHT :	PANEL WEIGHT :	Vertex BD	PANELOVE STENY
	22	ZSRUZINOV_A13	1000	38.9kg	SCREW QTY: 42	

Sheets

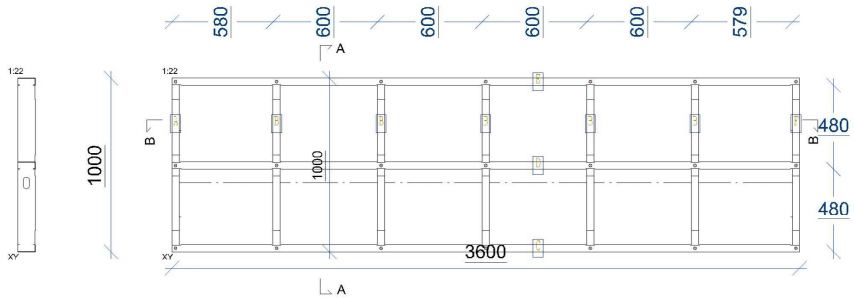

EXTERIOR SHEATHING

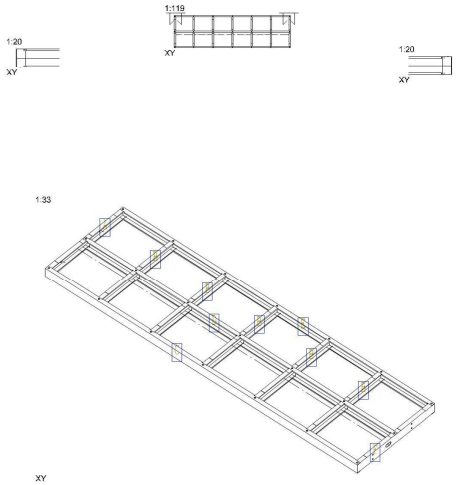

PIECE LIST				
LABEL	QTY	MATERIAL	DESCRIPTION	LENGTH
A	1	100S-41-1.5	STUD	997
B	5	100S-41-1.5	STUD	997
C	1	100S-41-1.5	BOTTOM TRACK	3600
D	1	100S-41-1.5	NOGGIN	3597
E	1	100S-41-1.5	TOP TRACK	3600
F	1	100S-41-1.5	STUD	997
Qty Total: 10	Total Length: 17776.00mm			

ATIKA1

ATIKA1	QUANTITY	PROJECT NAME :	PANEL HEIGHT :	PANEL WEIGHT :	Vertex BD	PANELOVE STENY
	22	ZSRUZINOV_A13	1000	38.9kg	SCREW QTY: 42	

Sheets

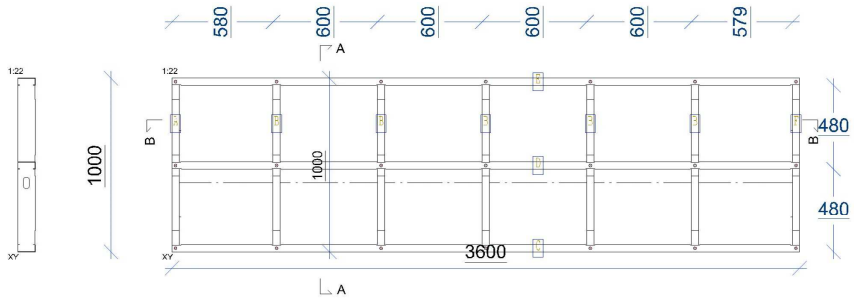

EXTERIOR SHEATHING

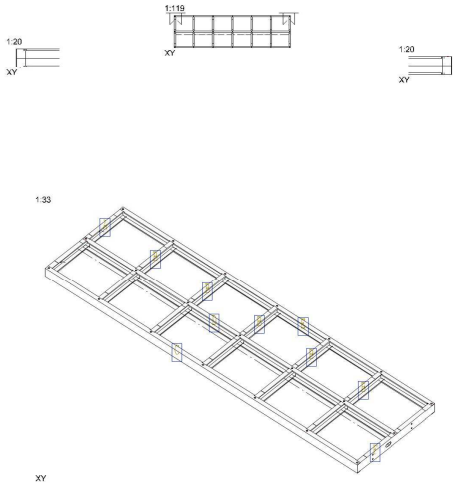

PIECE LIST				
LABEL	QTY	MATERIAL	DESCRIPTION	LENGTH
A	1	100S-41-1.5	STUD	997
B	5	100S-41-1.5	STUD	997
C	1	100S-41-1.5	BOTTOM TRACK	3600
D	1	100S-41-1.5	NOGGIN	3597
E	1	100S-41-1.5	TOP TRACK	3600
F	1	100S-41-1.5	STUD	997
Qty Total: 10	Total Length: 17776.00mm			

ATIKA1

ATIKA1	QUANTITY	PROJECT NAME :	PANEL HEIGHT :	PANEL WEIGHT :	Vertex BD	PANELOVE STENY
	22	ZSRUZINOV_A13	1000	38.9kg	SCREW QTY: 42	

Sheets

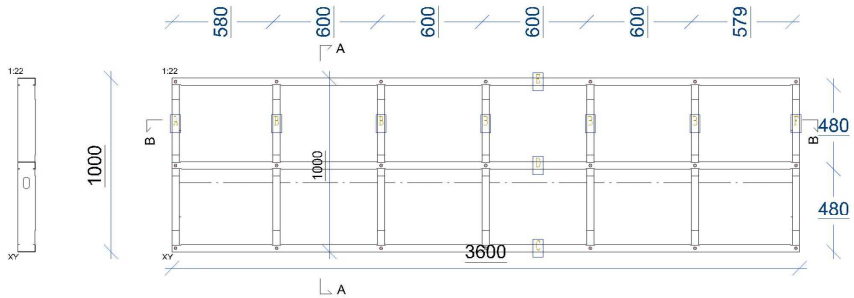

EXTERIOR SHEATHING

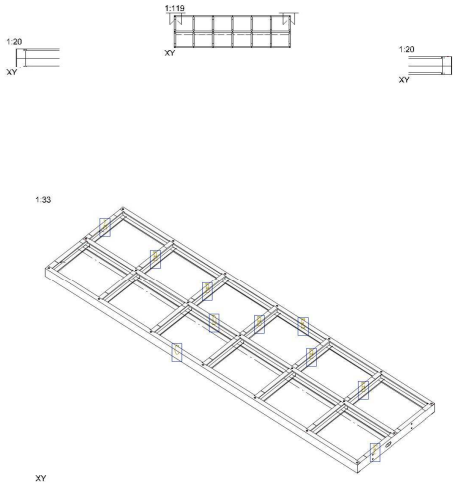

PIECE LIST				
LABEL	QTY	MATERIAL	DESCRIPTION	LENGTH
A	1	100S-41-1.5	STUD	997
B	5	100S-41-1.5	STUD	997
C	1	100S-41-1.5	BOTTOM TRACK	3600
D	1	100S-41-1.5	NOGGIN	3597
E	1	100S-41-1.5	TOP TRACK	3600
F	1	100S-41-1.5	STUD	997
Qty Total: 10	Total Length: 17776.00mm			

ATIKA1

ATIKA2	QUANTITY	PROJECT NAME :	PANEL HEIGHT :	PANEL WEIGHT :	Vertex BD	PANELOVE STENY
	2	ZSRUZINOV_A13	1000	25.1kg	SCREW QTY: 30	

Sheets

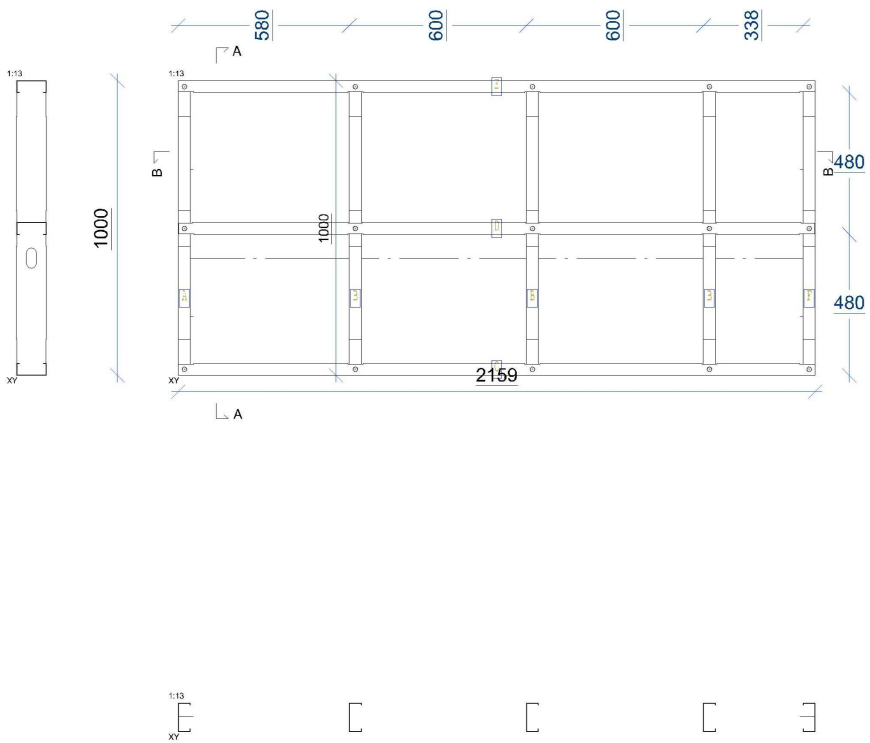

EXTERIOR SHEATHING

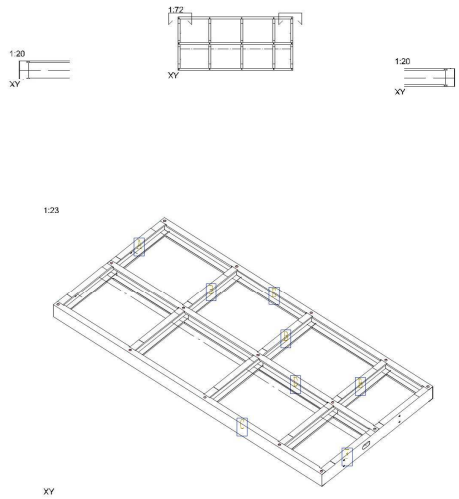

PIECE LIST

LABEL	QTY	MATERIAL	DESCRIPTION	LENGTH
A	1	100S-41-1.5	STUD	997
B	3	100S-41-1.5	STUD	997
C	1	100S-41-1.5	BOTTOM TRACK	2159
D	1	100S-41-1.5	NOGGIN	2156
E	1	100S-41-1.5	TOP TRACK	2159
F	1	100S-41-1.5	STUD	997
Qty Total: 8		Total Length: 11459.00mm		

ATIKA2

ATIKA2	QUANTITY	PROJECT NAME :	PANEL HEIGHT :	PANEL WEIGHT :	Vertex BD	PANELOVE STENY
	2	ZSRUZINOV_A13	1000	25.1kg	SCREW QTY: 30	

Sheets

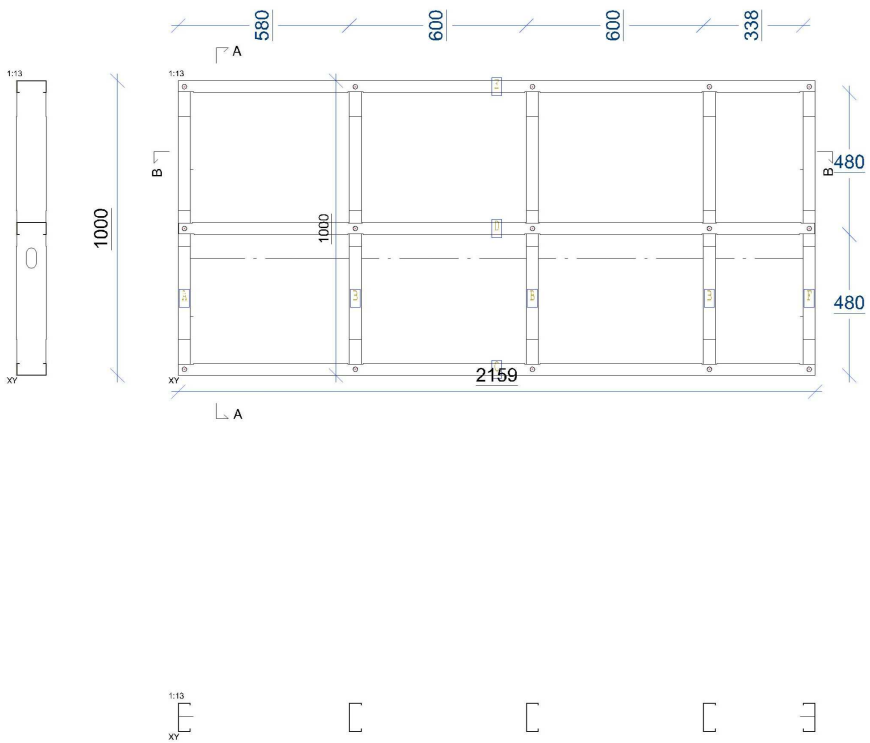

EXTERIOR SHEATHING

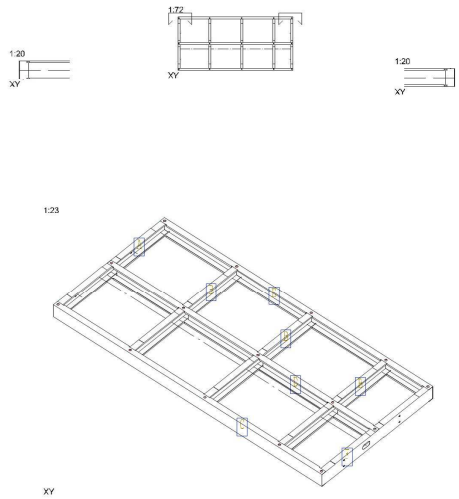

PIECE LIST

LABEL	QTY	MATERIAL	DESCRIPTION	LENGTH
A	1	100S-41-1.5	STUD	997
B	3	100S-41-1.5	STUD	997
C	1	100S-41-1.5	BOTTOM TRACK	2159
D	1	100S-41-1.5	NOGGIN	2156
E	1	100S-41-1.5	TOP TRACK	2159
F	1	100S-41-1.5	STUD	997
Qty Total: 8		Total Length: 11459.00mm		

ATIKA2

ATIKA2	QUANTITY	PROJECT NAME :	PANEL HEIGHT :	PANEL WEIGHT :	Vertex BD	PANELOVE STENY
	2	ZSRUZINOV_A13	1000	25.1kg	SCREW QTY: 30	

Sheets

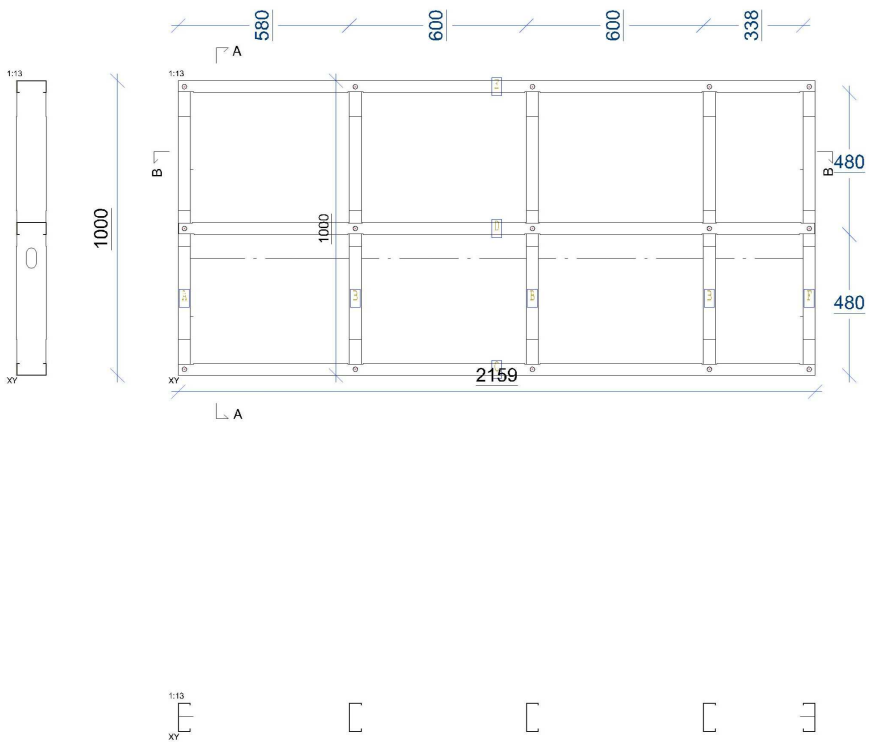

EXTERIOR SHEATHING

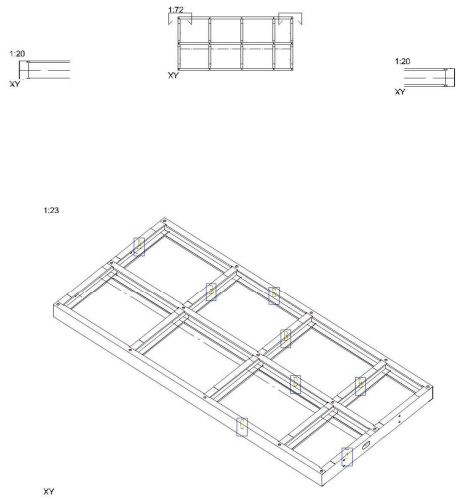

PIECE LIST

LABEL	QTY	MATERIAL	DESCRIPTION	LENGTH
A	1	100S-41-1.5	STUD	997
B	3	100S-41-1.5	STUD	997
C	1	100S-41-1.5	BOTTOM TRACK	2159
D	1	100S-41-1.5	NOGGIN	2156
E	1	100S-41-1.5	TOP TRACK	2159
F	1	100S-41-1.5	STUD	997
Qty Total: 8		Total Length: 11459.00mm		

ATIKA2

ATIKA2	QUANTITY	PROJECT NAME :	PANEL HEIGHT :	PANEL WEIGHT :	Vertex BD	PANELOVE STENY
	2	ZSRUZINOV_A13	1000	25.1kg	SCREW QTY: 30	

Sheets

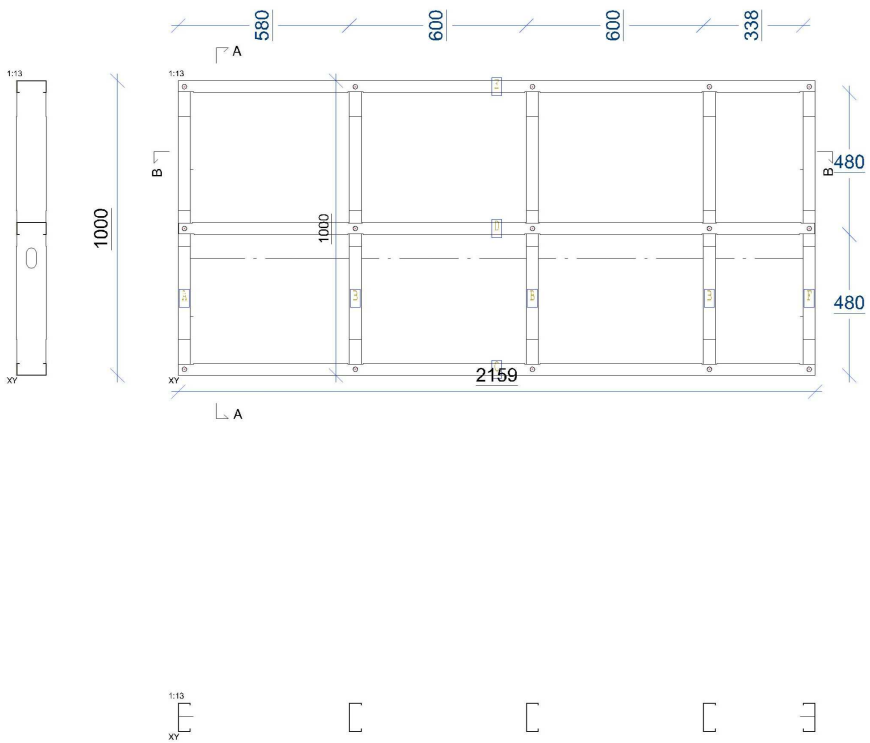

EXTERIOR SHEATHING

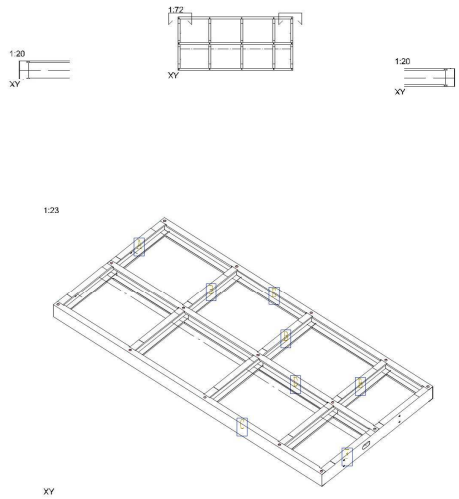

PIECE LIST

LABEL	QTY	MATERIAL	DESCRIPTION	LENGTH
A	1	100S-41-1.5	STUD	997
B	3	100S-41-1.5	STUD	997
C	1	100S-41-1.5	BOTTOM TRACK	2159
D	1	100S-41-1.5	NOGGIN	2156
E	1	100S-41-1.5	TOP TRACK	2159
F	1	100S-41-1.5	STUD	997
Qty Total: 8		Total Length: 11459.00mm		

ATIKA2

ATIKA3	QUANTITY	PROJECT NAME :	PANEL HEIGHT :	PANEL WEIGHT :	Vertex BD	PANELOVE STENY
	2	ZSRUZINOV_A13	1000	35.1kg	SCREW QTY: 42	

Sheets

EXTERIOR SHEATHING

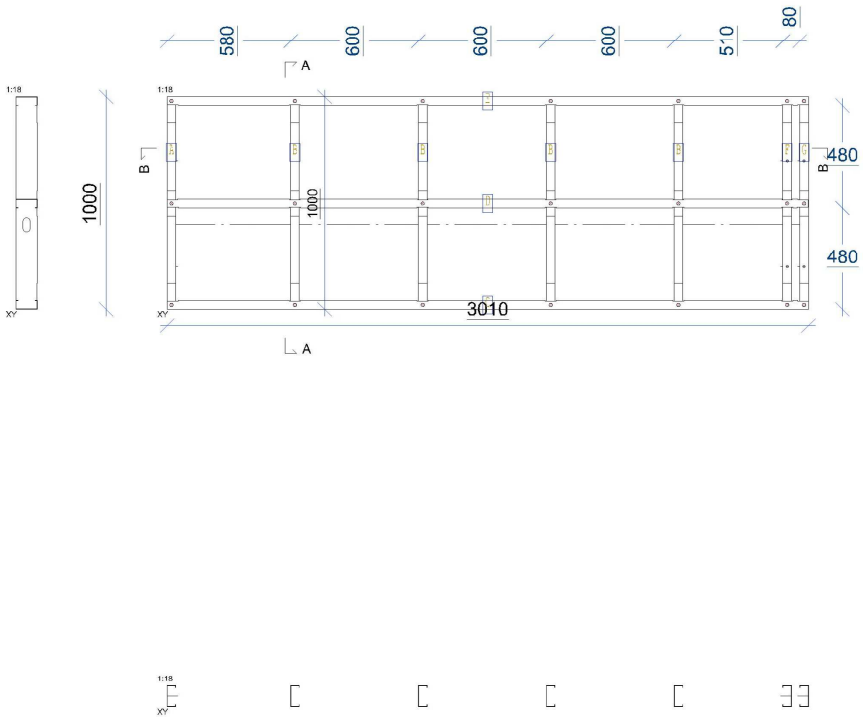

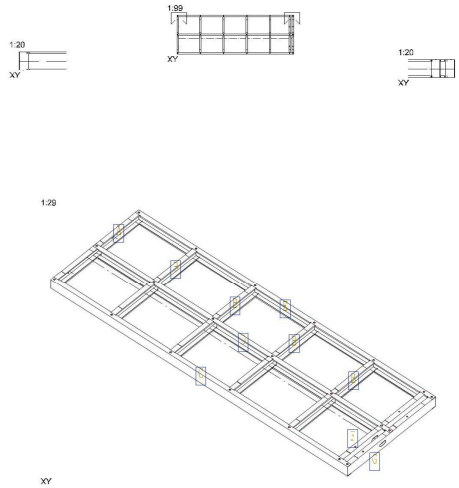

PIECE LIST				
LABEL	QTY	MATERIAL	DESCRIPTION	LENGTH
A	1	100S-41-1.5	STUD	997
B	4	100S-41-1.5	STUD	997
C	1	100S-41-1.5	BOTTOM TRACK	3010
D	1	100S-41-1.5	NOGGIN	3007
E	1	100S-41-1.5	TOP TRACK	3010
F	1	100S-41-1.5	STUD	997
G	1	100S-41-1.5	STUD	997
Qty Total: 10		Total Length: 16906.00mm		

ATIKA3

ATIKA3	QUANTITY	PROJECT NAME :	PANEL HEIGHT :	PANEL WEIGHT :	Vertex BD	PANELOVE STENY
	2	ZSRUZINOV_A13	1000	35.1kg	SCREW QTY: 42	

Sheets

EXTERIOR SHEATHING

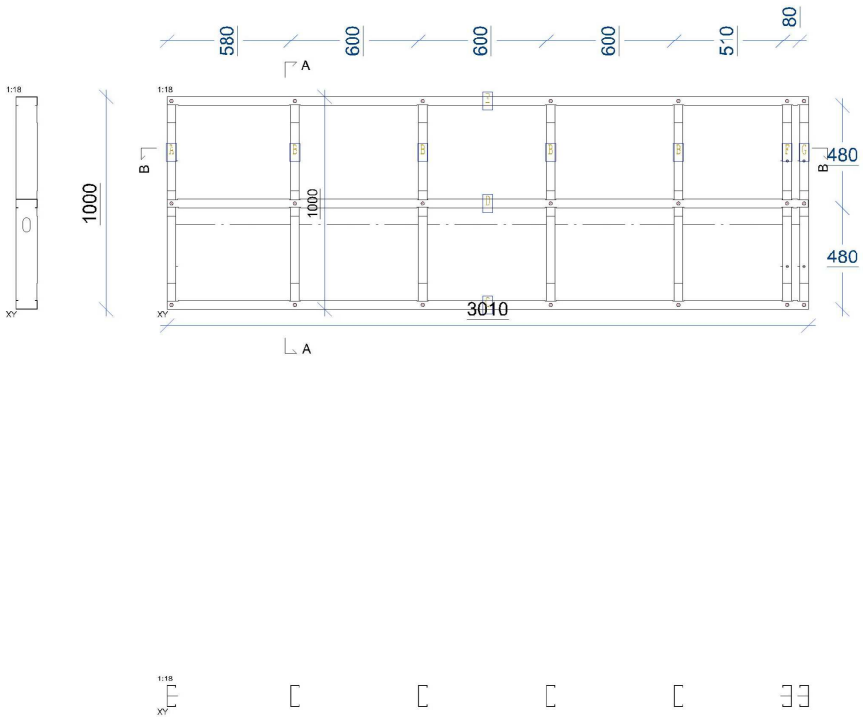

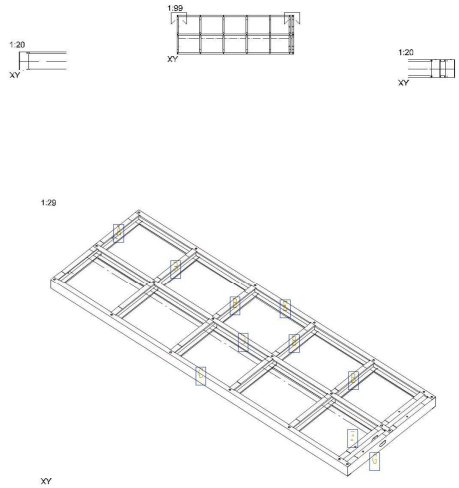

PIECE LIST				
LABEL	QTY	MATERIAL	DESCRIPTION	LENGTH
A	1	100S-41-1.5	STUD	997
B	4	100S-41-1.5	STUD	997
C	1	100S-41-1.5	BOTTOM TRACK	3010
D	1	100S-41-1.5	NOGGIN	3007
E	1	100S-41-1.5	TOP TRACK	3010
F	1	100S-41-1.5	STUD	997
G	1	100S-41-1.5	STUD	997
Qty Total: 10		Total Length: 16906.00mm		

ATIKA3

ATIKA3	QUANTITY	PROJECT NAME :	PANEL HEIGHT :	PANEL WEIGHT :	Vertex BD	PANELOVE STENY
	2	ZSRUZINOV_A13	1000	35.1kg	SCREW QTY: 42	

Sheets

EXTERIOR SHEATHING

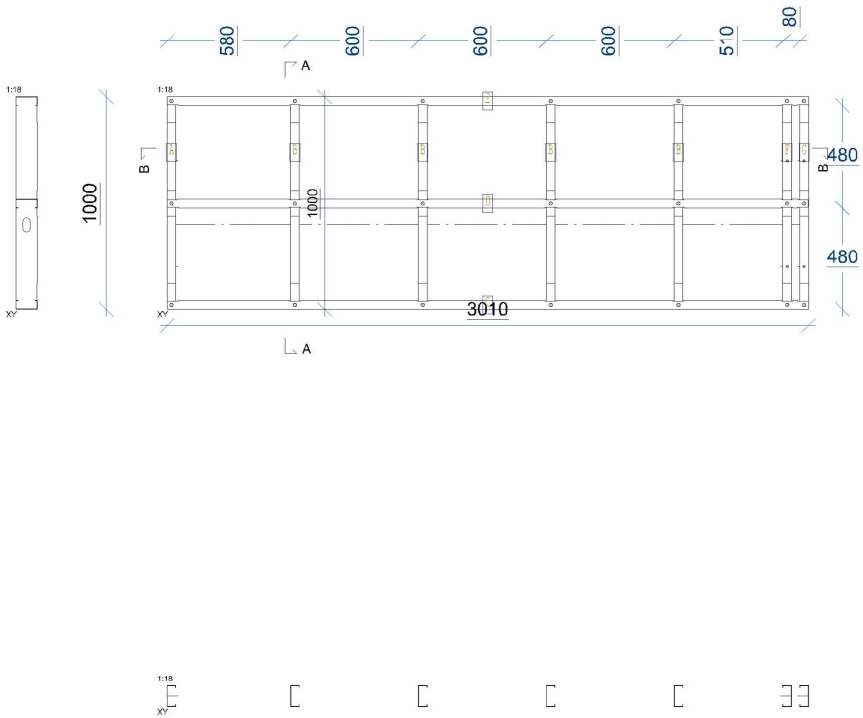

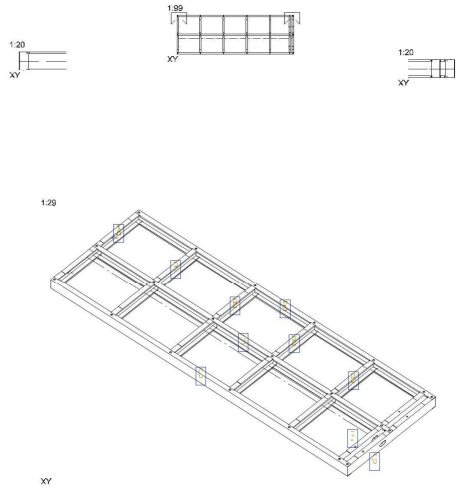

PIECE LIST				
LABEL	QTY	MATERIAL	DESCRIPTION	LENGTH
A	1	100S-41-1.5	STUD	997
B	4	100S-41-1.5	STUD	997
C	1	100S-41-1.5	BOTTOM TRACK	3010
D	1	100S-41-1.5	NOGGIN	3007
E	1	100S-41-1.5	TOP TRACK	3010
F	1	100S-41-1.5	STUD	997
G	1	100S-41-1.5	STUD	997
Qty Total: 10		Total Length: 16906.00mm		

ATIKA3

ATIKA3	QUANTITY	PROJECT NAME :	PANEL HEIGHT :	PANEL WEIGHT :	Vertex BD	PANELOVE STENY
	2	ZSRUZINOV_A13	1000	35.1kg	SCREW QTY: 42	

Sheets

EXTERIOR SHEATHING

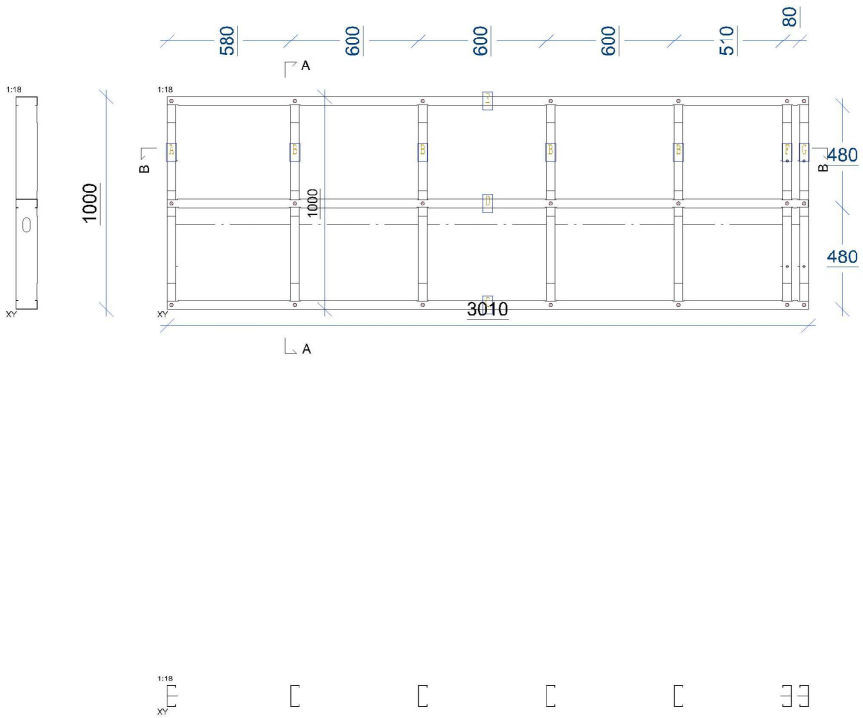

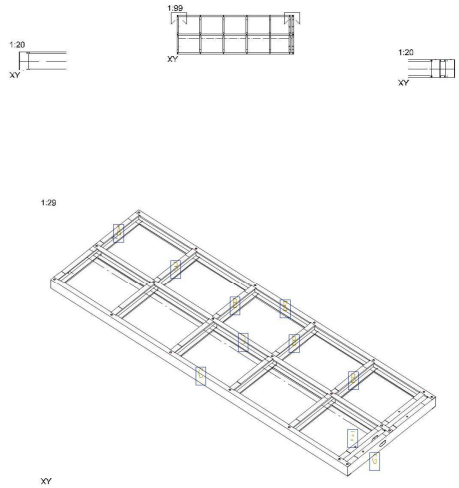

PIECE LIST				
LABEL	QTY	MATERIAL	DESCRIPTION	LENGTH
A	1	100S-41-1.5	STUD	997
B	4	100S-41-1.5	STUD	997
C	1	100S-41-1.5	BOTTOM TRACK	3010
D	1	100S-41-1.5	NOGGIN	3007
E	1	100S-41-1.5	TOP TRACK	3010
F	1	100S-41-1.5	STUD	997
G	1	100S-41-1.5	STUD	997
Qty Total: 10		Total Length: 16906.00mm		

ATIKA3

ATIKA5	QUANTITY	PROJECT NAME :	PANEL HEIGHT :	PANEL WEIGHT :	Vertex BD	PANELOVE STENY
	2	ZSRUZINOV_A13	1000	38.9kg	SCREW QTY: 42	

Sheets

EXTERIOR SHEATHING

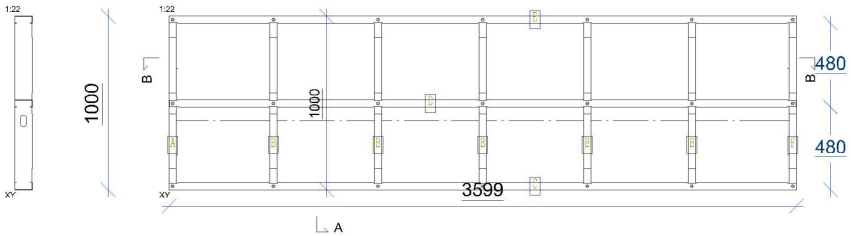

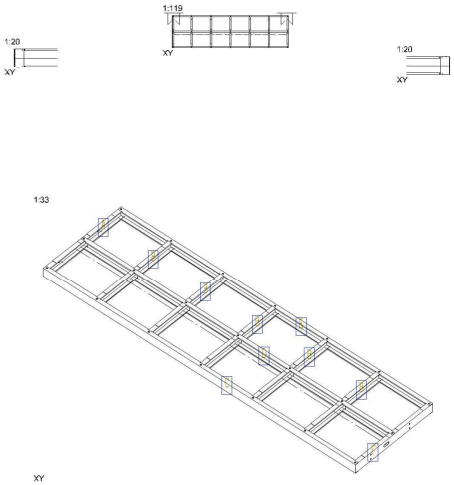

PIECE LIST				
LABEL	QTY	MATERIAL	DESCRIPTION	LENGTH
A	1	100S-41-1.5	STUD	997
B	5	100S-41-1.5	STUD	997
C	1	100S-41-1.5	BOTTOM TRACK	3599
D	1	100S-41-1.5	NOGGIN	3596
E	1	100S-41-1.5	TOP TRACK	3599
F	1	100S-41-1.5	STUD	997
Qty Total: 10	Total Length: 17773.00mm			

ATIKA5

ATIKA5	QUANTITY	PROJECT NAME :	PANEL HEIGHT :	PANEL WEIGHT :	Vertex BD	PANELOVE STENY
	2	ZSRUZINOV_A13	1000	38.9kg	SCREW QTY: 42	

Sheets

EXTERIOR SHEATHING

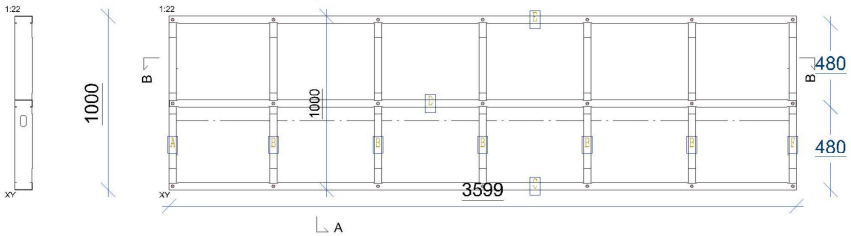

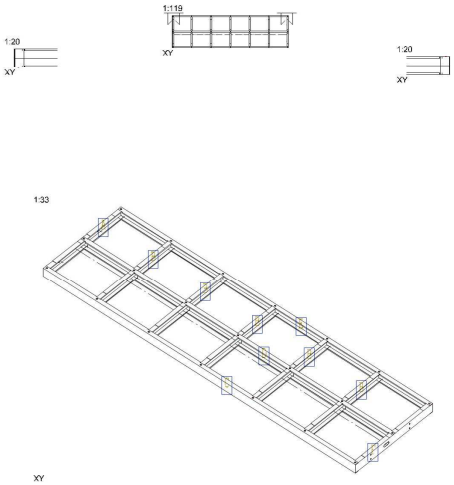

PIECE LIST				
LABEL	QTY	MATERIAL	DESCRIPTION	LENGTH
A	1	100S-41-1.5	STUD	997
B	5	100S-41-1.5	STUD	997
C	1	100S-41-1.5	BOTTOM TRACK	3599
D	1	100S-41-1.5	NOGGIN	3596
E	1	100S-41-1.5	TOP TRACK	3599
F	1	100S-41-1.5	STUD	997
Qty Total: 10	Total Length: 17773.00mm			

ATIKA5

ATIKA5	QUANTITY	PROJECT NAME :	PANEL HEIGHT :	PANEL WEIGHT :	Vertex BD	PANELOVE STENY
	2	ZSRUZINOV_A13	1000	38.9kg	SCREW QTY: 42	

Sheets

EXTERIOR SHEATHING

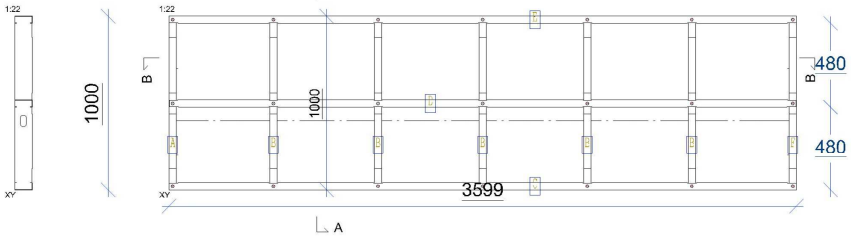

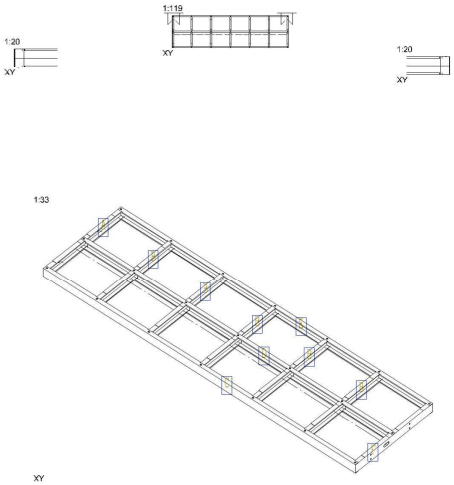

PIECE LIST				
LABEL	QTY	MATERIAL	DESCRIPTION	LENGTH
A	1	100S-41-1.5	STUD	997
B	5	100S-41-1.5	STUD	997
C	1	100S-41-1.5	BOTTOM TRACK	3599
D	1	100S-41-1.5	NOGGIN	3596
E	1	100S-41-1.5	TOP TRACK	3599
F	1	100S-41-1.5	STUD	997
Qty Total: 10	Total Length: 17773.00mm			

ATIKA5

ATIKA5	QUANTITY	PROJECT NAME :	PANEL HEIGHT :	PANEL WEIGHT :	Vertex BD	PANELOVE STENY
	2	ZSRUZINOV_A13	1000	38.9kg	SCREW QTY: 42	

Sheets

EXTERIOR SHEATHING

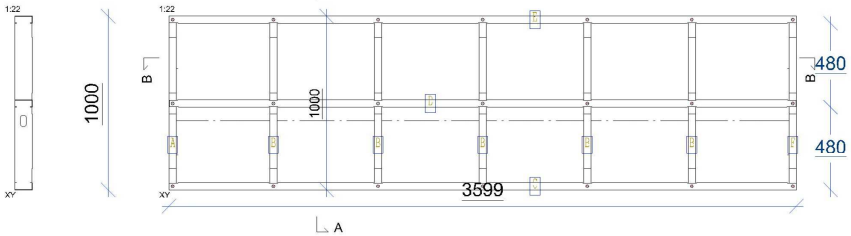

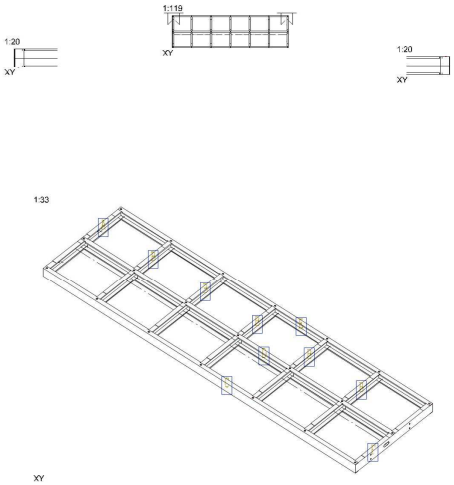

PIECE LIST				
LABEL	QTY	MATERIAL	DESCRIPTION	LENGTH
A	1	100S-41-1.5	STUD	997
B	5	100S-41-1.5	STUD	997
C	1	100S-41-1.5	BOTTOM TRACK	3599
D	1	100S-41-1.5	NOGGIN	3596
E	1	100S-41-1.5	TOP TRACK	3599
F	1	100S-41-1.5	STUD	997
Qty Total: 10	Total Length: 17773.00mm			

ATIKA5

ATIKA6	QUANTITY	PROJECT NAME :	PANEL HEIGHT :	PANEL WEIGHT :	Vertex BD	PANELOVE STENY
	2	ZSRUZINOV_A13	1000	41.1kg	SCREW QTY: 48	

Sheets

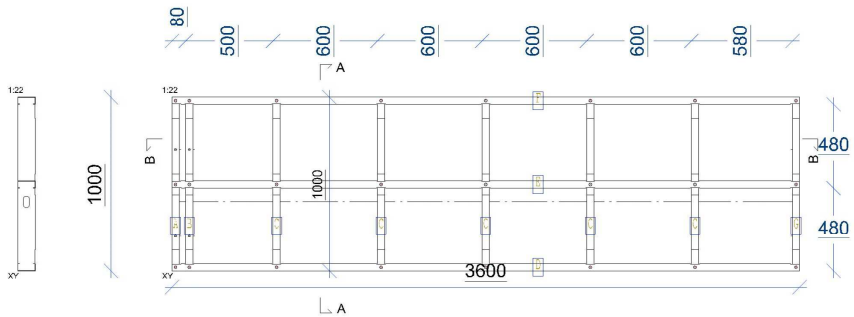

EXTERIOR SHEATHING

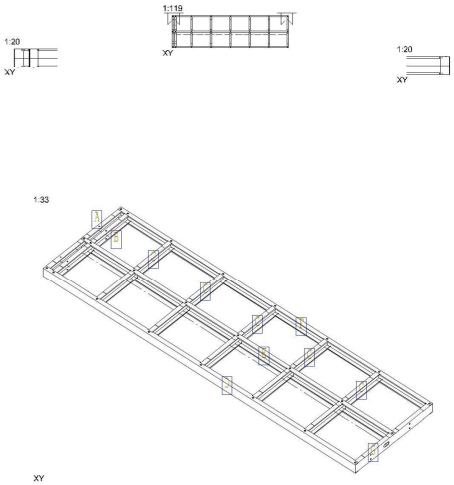

PIECE LIST				
LABEL	QTY	MATERIAL	DESCRIPTION	LENGTH
A	1	100S-41-1.5	STUD	997
B	1	100S-41-1.5	STUD	997
C	5	100S-41-1.5	STUD	997
D	1	100S-41-1.5	BOTTOM TRACK	3600
E	1	100S-41-1.5	NOGGIN	3597
F	1	100S-41-1.5	TOP TRACK	3600
G	1	100S-41-1.5	STUD	997
Qty Total: 11		Total Length: 18773.00mm		

ATIKA6

ATIKA6	QUANTITY	PROJECT NAME :	PANEL HEIGHT :	PANEL WEIGHT :	Vertex BD	PANELOVE STENY
	2	ZSRUZINOV_A13	1000	41.1kg	SCREW QTY: 48	

Sheets

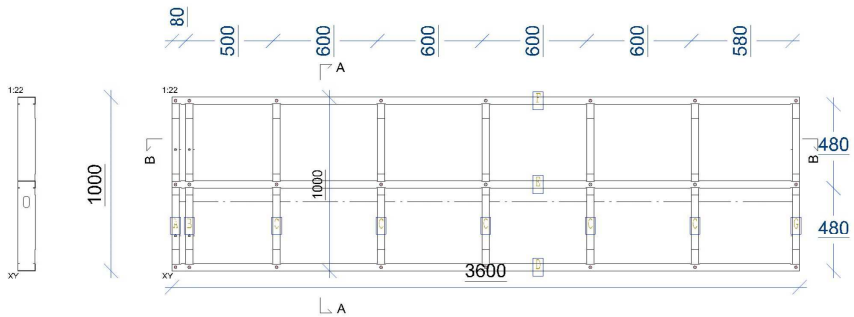

EXTERIOR SHEATHING

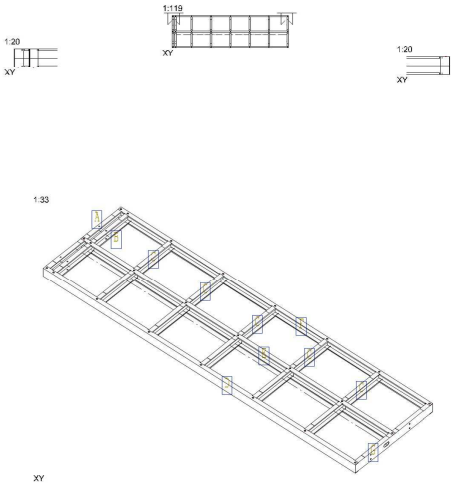

PIECE LIST				
LABEL	QTY	MATERIAL	DESCRIPTION	LENGTH
A	1	100S-41-1.5	STUD	997
B	1	100S-41-1.5	STUD	997
C	5	100S-41-1.5	STUD	997
D	1	100S-41-1.5	BOTTOM TRACK	3600
E	1	100S-41-1.5	NOGGIN	3597
F	1	100S-41-1.5	TOP TRACK	3600
G	1	100S-41-1.5	STUD	997
Qty Total: 11		Total Length: 18773.00mm		

ATIKA6

ATIKA6	QUANTITY	PROJECT NAME :	PANEL HEIGHT :	PANEL WEIGHT :	Vertex BD	PANELOVE STENY
	2	ZSRUZINOV_A13	1000	41.1kg	SCREW QTY: 48	

Sheets

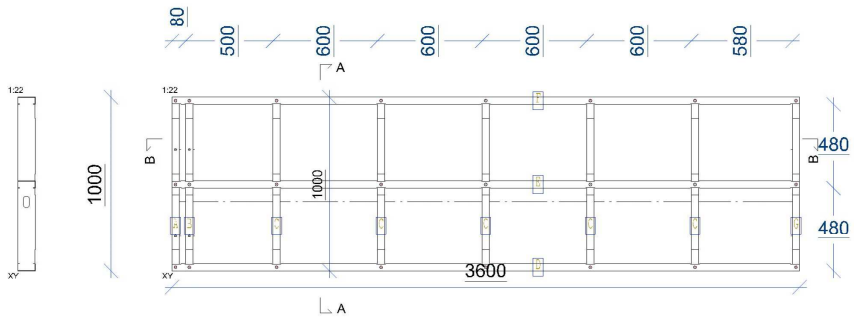

EXTERIOR SHEATHING

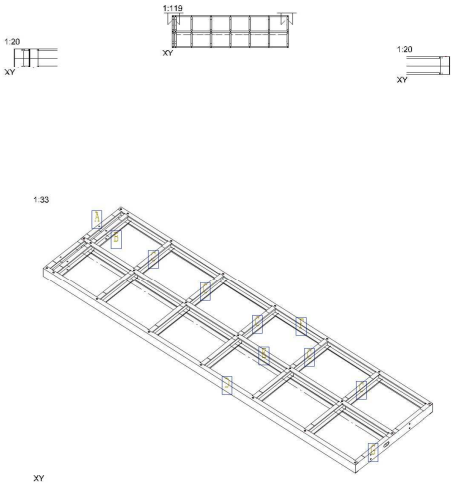

PIECE LIST				
LABEL	QTY	MATERIAL	DESCRIPTION	LENGTH
A	1	100S-41-1.5	STUD	997
B	1	100S-41-1.5	STUD	997
C	5	100S-41-1.5	STUD	997
D	1	100S-41-1.5	BOTTOM TRACK	3600
E	1	100S-41-1.5	NOGGIN	3597
F	1	100S-41-1.5	TOP TRACK	3600
G	1	100S-41-1.5	STUD	997
Qty Total: 11		Total Length: 18773.00mm		

ATIKA6

ATIKA6	QUANTITY	PROJECT NAME :	PANEL HEIGHT :	PANEL WEIGHT :	Vertex BD	PANELOVE STENY
	2	ZSRUZINOV_A13	1000	41.1kg	SCREW QTY: 48	

Sheets

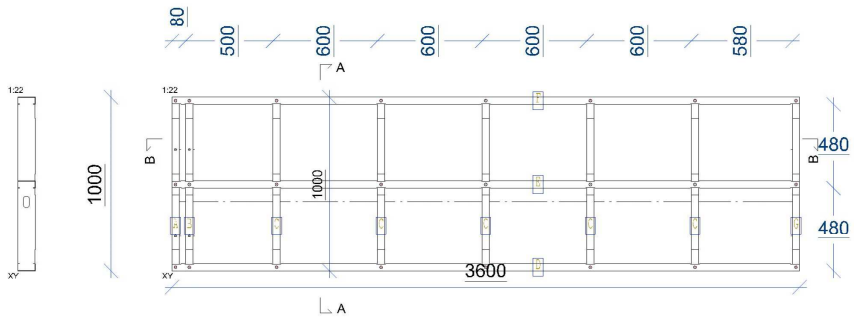

EXTERIOR SHEATHING

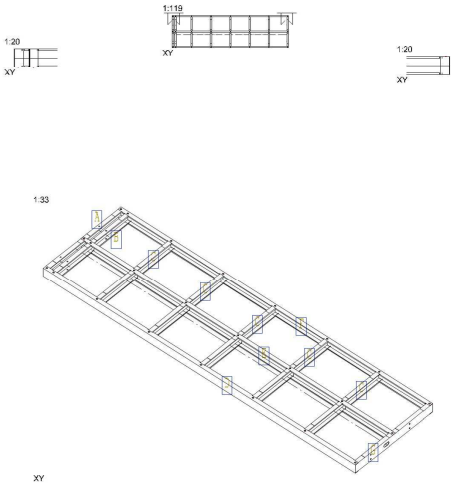

PIECE LIST				
LABEL	QTY	MATERIAL	DESCRIPTION	LENGTH
A	1	100S-41-1.5	STUD	997
B	1	100S-41-1.5	STUD	997
C	5	100S-41-1.5	STUD	997
D	1	100S-41-1.5	BOTTOM TRACK	3600
E	1	100S-41-1.5	NOGGIN	3597
F	1	100S-41-1.5	TOP TRACK	3600
G	1	100S-41-1.5	STUD	997
Qty Total: 11		Total Length: 18773.00mm		

ATIKA6